Original

Rainwater Unit SIGMA

EN

INSTALLATION INSTRUCTIONS

- Operating instructions for the SIGMA rainwater unit
- Please read through these instructions carefully before you attempt to install and use the rainwater unit!
- 3- or 4-stage self-priming centrifugal pump
- Operates fully automatically to supply household appliances on demand
- Automatic mains water top-up with integral 9-litre top-up tank
- Energy efficient technology, standby usage less than 0.2 W

made in Germany

WISY Rainwater Harvesting

The WISY 4-stage rainwater cleansing principle in the single-family home

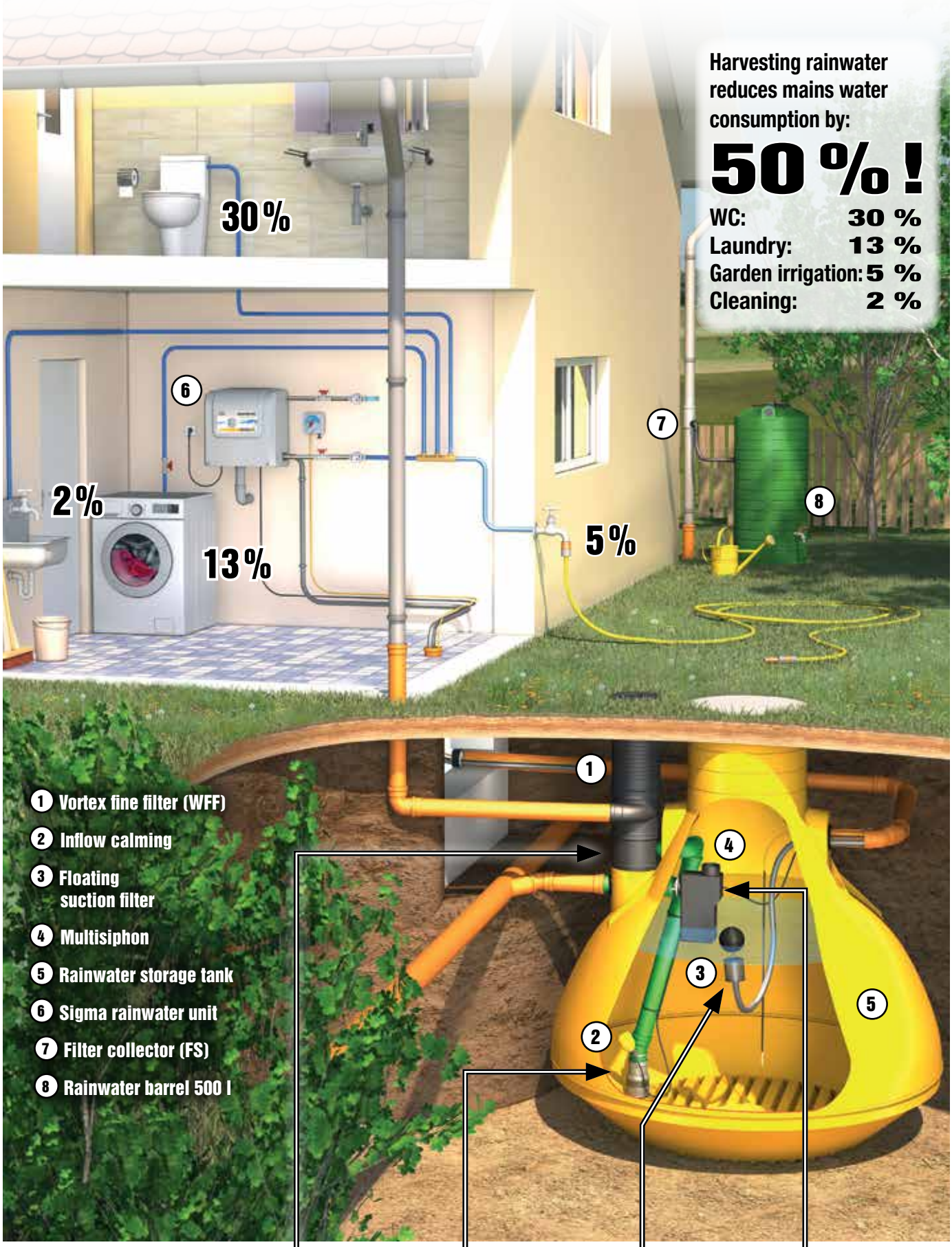

The WISY 4-stage rainwater cleansing system

Stage 1
Filtering with WISY vortex fine filter with separation of dirt particles and oxygen enrichment

Stage 2
WISY inflow calming prevents resuspension of sediment and distributes the fresh, oxygen-rich water in the storage tank

Stage 3
Water is extracted with the WISY floating suction filter suspended at the optimum height

Stage 4
Overflow with skim effect, odour seal, small animal guard and backflow prevention with WISY multi-siphon

SIGMA Rainwater Unit

Please read through these installation instructions carefully before you attempt to install and use the rainwater unit!

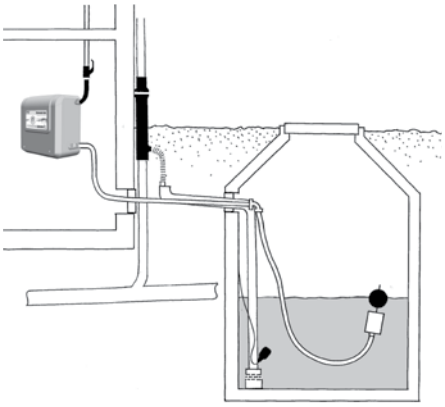

With floating fine suction filter (accessory) and float switch

These installation instructions include the following information relating to:

- General description, applications and proper use
- Safety information and warning notices
- Delivery, scope of supply and design
- Recommended accessories
- Design and operating principle
- Installation
- Commissioning
- Maintenance, servicing
- Troubleshooting guide
- Technical data
- Guarantee conditions
- Company name and address
- Overview diagram (annex)
- Declaration of conformity (annex)
- Konformitätserklärung (Anlage)

Failure to heed the information indicated by this symbol could result in serious or fatal injury.	*Failure to heed the information indicated by this symbol could result in death by electric shock.*	*Failure to heed the information indicated by this symbol could result in damage to the equipment, or damage caused by the equipment.*

Applications

The SIGMA rainwater unit developed by WISY is a complete rainwater harvesting system with integral self-priming pump, control system and automatic mains water top-up. It combines several devices to form a single package for installation.

SIGMA pumps the rainwater out of the storage tank and feeds it under pressure into the rainwater supply circuit. At the same time, SIGMA monitors the fill level of the storage tank and automatically tops up the system with mains water when required.

Proper use

SIGMA is designed to supply toilet cisterns, washing machines and garden irrigation systems in single-family homes with clear, filtered rainwater.

Important preconditions for correct operation of the system:

- The suction line must be installed with a continuous rise from the rainwater storage tank to the SIGMA unit. The wall unit must be installed above the maximum water level in the rainwater storage tank.
- With a height difference of 3 m between the wall unit and the rainwater storage tank base, the maximum length of the suction line is 15 meters.
- The suction line must have an inside diameter of at least 1“ (2.54 cm).
- A floating fine suction filter SAFF (item SZ 9924) with non-return valve is required in the rainwater storage tank

OPTIMA rainwater units for greater distances and height differences

If the rainwater storage tank must be installed with a larger height differential or at a greater distance from the rainwater unit due to the site topology, WISY‘s OPTIMA/OPTIMAPlus rainwater units can be installed. OPTIMA rainwater units operate without a suction line and are designed to pump water over longer line distances/height differences.

Improper use

SIGMA cannot be used to supply outlets at a rate of less than 1 litre per minute (e.g. drip irrigation systems; outlets must close completely, the rainwater circuit must be leak-tight).

!

SIGMA is not suitable for pumping dirty rainwater or well water (which contains dirt or sand particles). SIGMA cannot be used to pump water out of a dirty rainwater storage tank. Improper use of the equipment can result in destruction of the pump.

Guide to components

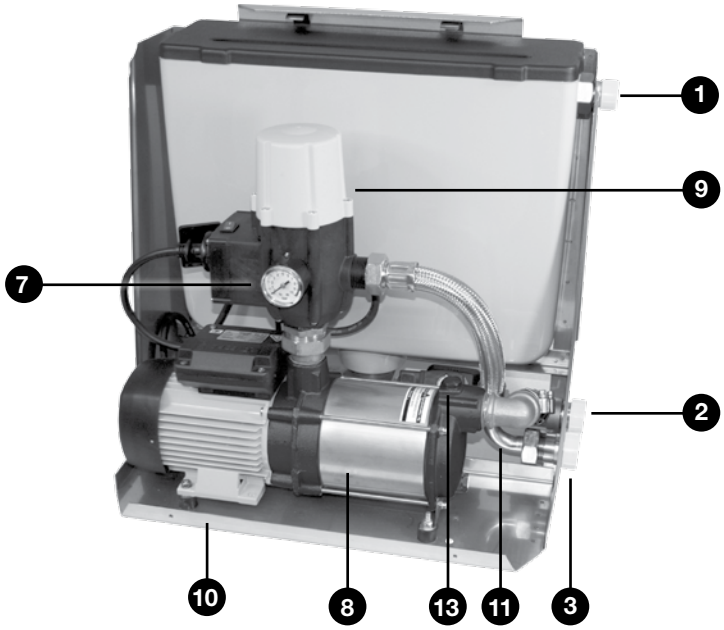

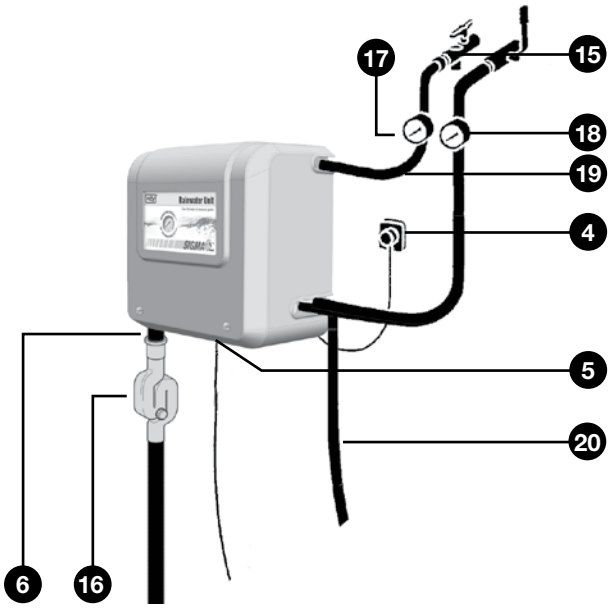

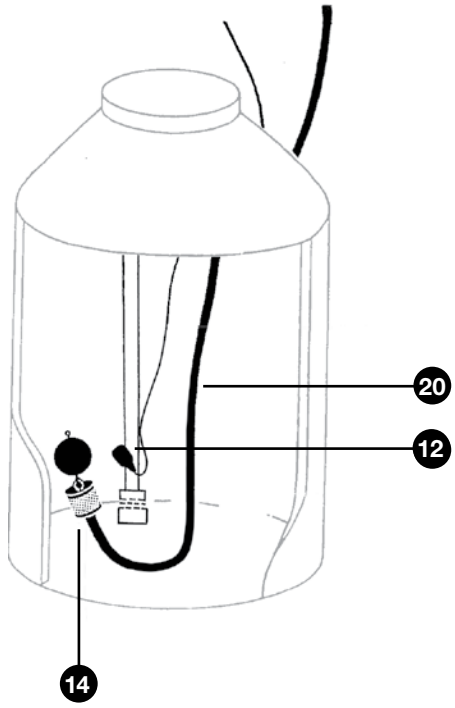

1 Mains water connection (top-up)

2 Suction line connection (from storage tank)

3 Pressurized outlet (for supply of the house)

4 SIGMA mains plug

5 Electrical connection for float switch

6 Emergency overflow drain connection (DN 75)

7 Operating pressure indicator (pressure gauge)

8 Self-priming centrifugal pump

9 Automatic switch (with display and operator panel)

10 Base frame

11 Connecting hose to pressurized outlet

12 Float switch

13 Screw plug for venting/filling

Accessories not included in the scope of supply:

14 Floating fine suction filter (SAFF) with non-return valve (accessory)

15 Isolating valves

16 Siphon Odour trap

17 Water meter for mains water top-up

18 Water meter for pumped rising main

19 Flexible connecting hoses

20 Suction hose (minimum Diameter 1“)

Safety instructions

Read the operating instructions carefully before commencing assembly and installation work and store them in a safe place for later reference.

Do not lift or pull the float switch by its electric cable.

Never climb inside the storage tank when the SIGMA rainwater unit is connected to the power supply. Always unplug the SIGMA rainwater unit to disconnect it from the power supply before carrying out any inspection, maintenance or repair work to the SIGMA rainwater unit or inside the storage tank.

Never leave the rainwater storage tank unsupervised when it is open! No one except specially trained personnel is allowed to climb inside the rainwater storage tank. When working inside the tank, personnel must be supervised at all times and must take appropriate safety precautions (e.g. wear a recovery harness).

If the residual current device or the fuse trips, the trip cause must be identified and rectified by the manufacturer / by a contractor appointed by the manufacturer.

If the power cable to the SIGMA unit or the float switch is found to be damaged, it must be replaced by a professional electrician.

Additional instructions

Installation work which involves particular hazards (e.g. risk to mains water supply or the electrical installation) must always be carried out by a properly trained, approved plumber or electrician who is at least qualified in the following technical areas:

- Selection of appropriate tools and suitable electrical and installation materials
- IP degrees of protection
- Correct methods of installing electrical and other materials
- TN-C system, TN-S system and appropriate additional measures where necessary.
- Drinking water protection in accordance with DIN EN 1717, DIN 1989
  Failure to install the equipment properly can endanger your own life and the lives of people who use the equipment.

The system must be connected to a 230 V, single-phase AC (50 Hz) supply. The SIGMA unit must be operated with clean water (rainwater or mains water) which does not contain aggressive, abrasive or solid substances.

Failure to adhere to these instructions and/or unauthorized interference with the SIGMA shall exempt WISY AG from any liability for any personal injuries, property damage and/or damage to individual components of the SIGMA system.

Delivery / shipment of the unit

The SIGMA product is generally shipped in a cardboard box. The cardboard box must not be dropped, crushed or handled with force, and must be inspected for damage as soon as it is received.

The cardboard box or its unpacked contents must be stored in a safe, dry, and frost-free location and protected against the ingress of dirt or contaminants.

Scope of supply and design

Wall unit for indoor installation

- Self-priming, multi-stage centrifugal pump with automatic switch Zeta 02, pressure indication: Operating pressure max. 3.3 / 4.4 bar; delivery rate max. 65 l/min.
- Mains water top-up function compliant with DIN EN 1717, automatically fills the mains top-up tank (9-litre volume) integrated in the wall unit when insufficient rainwater is available, float valve with dirt filter; mains top-up tank with safety emergency overflow DN 70.
- Cover to protect the rainwater unit.
- Wall mounting kit.

Storage tank equipment

- Float switch (yellow) with stainless steel clamp for attachment to tube diameter 110 to 130 mm, with 15 m electric cable without plug, for connection to the wall unit.

Accessories

Components which are not supplied as standard

- Hoses for connecting the SIGMA rainwater unit to the rainwater circuit and the mains water top-up, two ¾“ pressure hoses with stainless steel sheath, 0.5 m in length, with 1“ union nut and ¾“ brass ball valve, with dirt trap for mains water top-up (Item No. RW 78 00).
- SIGMA Cistern Connection Set (1“)
  Consists of floating fine suction filter SAFF with non-return valve, 10 m flexible suction hose, 2 stainless steel hose clamps and 1 hose connector.
- Wall or tube penetration WD 100, with 4 holes (1 x dia. 36 mm for suction line 1“, 2 x dia. 10 mm for electric cable, 1 x dia. 6 mm; Item No. WD 11 00).

Design and operating principle

The SIGMA rainwater unit draws rainwater from a storage tank and feeds it under pressure into the rainwater supply circuit. If the water level in the storage tank is low, the system automatically switches over to mains water operation.

Supply with rainwater

The self-priming pump draws harvested rainwater out of the storage tank and pumps it to the appliances. If a valve at one appliance (e.g. toilet flushing system) is opened, the pressure in the rainwater supply circuit drops. The pump starts up when the pressure falls below 1,5 bar. When all valves at the appliances are closed again and there is no flow through the circuit, the automatic switch shuts down the pump when operating pressure is reached.

Mains water operation when rainwater level is low

Switchover to mains water top-up is fully automatic provided that the float switch in the rainwater storage tank is securely attached to the inflow tube (inflow calming) at a vertical height of 30 cm above the base of the tank. If this „minimum water level“ is reached, the float switch in the storage tank closes. (Mains) water is now sucked out of the top-up tank integrated in the SIGMA unit.

The drop in water level in the top-up tank causes the float valve to open to allow inflow of mains water into the top-up tank. In the rare occasion that the mains water that is supplied to the top up tank is coming in with a very low pressure, it can happen that the pump is drawing more water from the top up tank than can be simultaneously replaced with mains water. In this case the automatic switch stops the pump. After a few seconds waiting time the pump is automatically switched on again. When the valves at all appliances are closed again, the pump control system shuts down the pump as soon as operating pressure is reached (= max. delivery head).

Dry run protection

The automatic switch provides dry run protection when there is insufficient water in the circuit.

Manual switchover to mains water operation

It is possible to manually switch the rainwater unit over to mains water operation. Manual switchover is possible irrespective of the fill level in the rainwater storage tank. Mains water operation can be selected by means of an electric switch on the side of the automatic switch. If the switch is turned on, the self-priming pump automatically extracts water from the mains water top-up tank when an appliance valve is opened.

position of switch 0 = fully automatic function

position of switch 1 = unit draws mains water

Installation requirements

The SIGMA system must be installed by specially trained installation personnel, i.e. by properly qualified, approved installation specialists and electricians. This is a basic requirement for maintaining the validity of the manufacturer‘s guarantee.

Attention to backflow level and floor drain in the installation area

The SIGMA unit must be installed above the backflow level in a frost-free room which has a floor drain. Special measures must be implemented if the unit is installed and operated below the backflow level. Please contact WISY‘s technical support team for advice about installation below backflow level.

Note the length, height difference and continuous rise of the suction line from the storage tank base up to the Sigma unit!

The suction tube must be installed with a continuous rise up to the SIGMA wall unit. The tube must have an inside diameter of at least 1“ (2.54 cm).

With a height difference of 3 m between the tank base and the SIGMA unit, the maximum length of the suction line is 15 meters.

Connect the emergency overflow DN 70

The emergency overflow (DN 70) of the mains top-up tank must be permanently and securely connected to a drain (minimum DN 70). The room in which the SIGMA unit is installed must have a floor drain.

!

The water column between the bottom edge of the wall unit and the highest operating point (valve at appliance) must not exceed 15.0 m.

The wall unit and the supply lines must not be installed in locations which are exposed to substantial heat sources, as temperature rises in these components can cause the system pressure to increase and result in component damage.

Rinse piping and hoses

Piping or hoses must be cleaned or flushed through before use to remove any deposits of dirt/dust caused by building work. Protective plugs must be removed before pipes or hoses are connected.

Installation

Install the wall unit inside the building

Line up the wall mounting kit horizontally and attach it to the wall. The wall-mounting bracket can be used as a drilling template. The distance between the holes is 28 cm. The wall unit can then be inserted in the groove of the bracket.

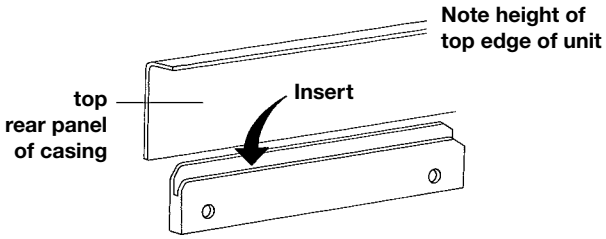

Connection to the indoor pipework

The connection between the wall unit and the rainwater supply circuit / mains water pipe must be high pressure resistant, flat-sealing and acoustically isolated. The ball valve with dirt trap (accessory hose connection set RW 78 00) must be used to connect the rainwater unit to the mains water pipe.

Installation of components in the rainwater storage tank

Clamp the float switch to the inflow calming tube in the rainwater storage tank at a vertical distance of between 30 and 35 cm from the tank base.

Attach the floating fine suction filter with the stainless steel hose clamp to the suction hose in the storage tank.

Route the electric cable for the float switch and the suction hose (and possibly the measuring lead for the level indicator) through a service duct into the utility room of the building.

Fill the suction hose with water, then attach it with hose nozzle and isolating valve to the suction end of the SIGMA wall unit with a hose clamp.

Do not install any flow restrictions (water meters, filters, drain cocks, etc.) in the SIGMA suction line.

Electrical connection of indoor wall unit

Mains connection protected by RCD

Power plug for float switch

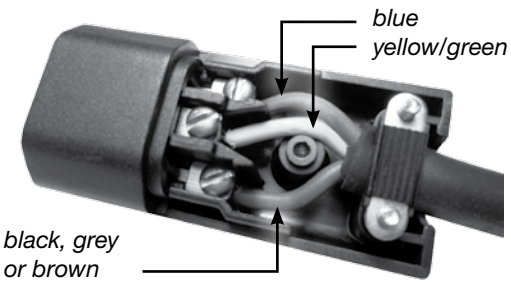

The mains power connection (AC, single-phase, 230 V, 50 Hz) of the SIGMA rainwater unit must be equipped with a residual current device (0.03 A) and protected by a 16 A fuse.

Wire up the connecting cable of the float switch to the plug supplied. See photograph on left for correct termination of wires. Insert the plug into the loosely hanging, downward pointing socket outlet located between pressure control and top up water tank underside of the wall unit.

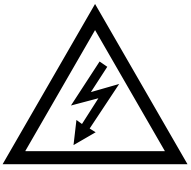

All electrical work must be carried out in accordance with the safety instructions given on page 5.

Commissioning the SIGMA

for comissioning a minimum water level of 0,5 meter in the Rainwater tank is necessary

1. After flushing out all dirt from the connecting pipe, completely fill the pump unit and the suction hose with water. The suction hose can be filled directly, but the pump must be filled with water by opening the screw plug.
2. After flushing the top mains water line, connect it to the unit. Open the isolating valve in the mains top-up pipe. The top-up tank fills up with mains water.
3. Connect the plug for the float switch to the loose hanging socket at the wall unit
4. Open the valves at the applications, e.g. toilet flush.
5. Connect the SIGMA to the electricity supply.
6. As soon as all air has been removed from the system, close the valves at the applications! When the maximum operating pressure is reached (maximum delivery head, see technical data), the SIGMA is ready to operate.
7. Check the propper function of the mains water supply, by switch over to position 1. After the test return the switch to 0.
8. Replace the Cover of the top up water tank and replace the Cover of the whole unit

ZETA 02 Programming

Note:
The "Reset" button on the Zeta 02 serves two functions, if pressed for less than 1 sec. it will go into reset mode, pump starts running. If pressed for longer it will go into one of the programming modes below

Programming Run-on-time.

Mode 1 – Fast Flash

To **Enter** – Press and hold reset button **(10 secs until LED flashes green, then let go of the button). Then** briefly press reset button to toggle between settings.

FAST FLASHING ON OFF	**5 sec Run-on-time** (Default and recommended setting for normal use)
FAST FLASHING OFF ON	**3 sec Run-on-time**
FAST FLASHING ON ON	**1 sec Run-on-time**

To save the setting press and hold the reset button until the power light stops flashing (approx. 10 secs.)

Programming excess pump run and starts functions

Mode 2 – Slow Flash

To **Enter** – Press and hold reset button **(20 secs until LED flashes green, then let go of the button). Then** briefly press reset button to toggle between settings.

D off = No time limited pump stop. Pump runs as long as water flows

D on – Pump stops after 10 minutes continuous run. (May need to leave this off for some irrigation applications).

T off = No pump stop in case of frequent on/off functions.

T on – Pump stops after 25 starts per hour. (Where multiple starts are occurring, we would recommend installing a pressure vessel).

SLOW FLASHING OFF OFF	**D off**	**T off**
SLOW FLASHING ON OFF	**D off (Default)**	**T on (Default)**
SLOW FLASHING OFF ON	**D on**	**T off**
SLOW FLASHING ON ON	**D on**	**T on**

Save the setting by pressing and holding the reset button until the power light stops flashing (approx. 10 secs.)

IF either of these functions has switched the pump off, THEN the fault light (only) will show.
IF the fault light AND the power light show then this indicates that a "Dry Run" type fault has occurred. (i.e. No flow arrived at the zeta 02 when the pump power was on)

Troubleshooting guide for Zeta 02

Type of fault	Cause	Remedy
The pump is running continuously.	a) Water loss of more than 0.7 litre/ minute from the circuit. b) The switch (RESET) is blocked. c) The printed circuit board is defective.	a) Check the entire installation, water taps, toilets, etc. b) Press the switch a number of times. If it remains blocked, contact customer service for advice. c) Replace the printed circuit board (contact customer service).
The pump does not start.	a) Insufficient water, dry run protection is active, LED (FAILURE) is illuminated. b) The pump is blocked. The LED (FAILURE) is illuminated, the safety system has been activated. After the switch (RESET) is pressed, the LED (ON) lights up but the pump does not start. c) The printed circuit board is defective. d) Power supply fault. e) Insufficient pump pressure. The safety system has been activated and LED (FAILURE) is illuminated. f) Air is entering the pump suction line. The pressure gauge is indicating much lower than normal or strongly fluctuating pressure values. The safety system has been activated, the pump is stationary. The LED (FAILURE) is illuminated.	a) Find and remedy the cause for the low water level; vent the pump (and pumped rising main to ZETA 02 if submersible pump is connected) before recommissioning the system (contact customer service if required). b) Contact customer service. c) Replace the printed circuit board (contact customer service). d) Check whether the electrical power supply is functioning properly. LED (POWER) must be illuminated. e) Check whether the pump is delivering the required pressure of 0.8 bar above the cut-in pressure of the ZETA 02 controller. f) Check and repair the hose and pipe connections at the suction end of the pump (contact customer service if required).
The pump is starting and stopping continuously.	a) Leakage from water circuit.	a) Check the water supply circuit downstream of the ZETA 02 controller for water loss as a result of open or dripping outlets, open float valves in toilet cisterns or leaking garden hoses, close or repair the outlets (contact customer service if required).

Expansion vessel

If less than 2 litres of water is extracted per minute from the system, the pump starts rapid on/ off cycling, i.e. it switches on and off rapidly. This cycling behaviour can cause serious damage to the pump. If it is anticipated that the pump will behave in this way, e.g. because it is used to supply a drip irrigation system, we recommend the installation of a suitable diaphragm expansion vessel.

Maintenance and servicing

Inspections/tests at 6-monthly intervals:

- Inspect the SIGMA system and the water circuit connections for leaks
- Check the system pressure indication
- Test the pump start and stop points at the automatic switch
- Test mains water operation, e.g. by setting the switch on the side of the automatic switch to „mains water mode“ and closing the isolating valve at the suction end

!

The SIGMA rainwater unit must be disconnected from the mains power supply before any maintenance work is carried out on the open storage tank. Compliance with the safety instructions (see heading „Safety instructions“ in this document) is absolutely essential!

Inspections/tests at 12-monthly intervals:

- Inspect the dirt trap at the isolating valve of the mains water connection, clean the trap if required (call in a specialist if necessary)
- Inspect the floating fine suction filter in the rainwater storage tank and clean if necessary from ground surface level using a water jet or a long-handled brush (call in a specialist if necessary)

Replacement:

- The solenoid valve at the mains water outlet must be replaced by a specialist after the system has been in operation for 10 to 15 years.

Repairs

All repair work must be carried out by the manufacturer or by contractors who have been explicitly approved by the manufacturer. Repairs, modifications to components or modifications to factory-assembled SIGMA components carried out by unauthorized persons shall invalidate the guarantee!

Environmental guidance

Disposal / recycling of transport packaging

The SIGMA rainwater unit is shipped in recyclable cardboard packaging. Please recycle it as waste paper! Please take the Styropor packaging to your local recycling centre.

Disposal / recycling of old units

Waste electrical and electronic equipment often contains valuable materials which can be reused / recycled. However, they also contain harmful substances which are essential to the proper, safe operation of the equipment.

These substances pose a risk to human health and to the environment if the products are disposed of as general (non-recyclable) household waste or are incorrectly handled. For this reason, you must never dispose of an old unit as general (non-recyclable) household waste.

Use the recycling centres / facilities provided in your area to return defective electrical or electronic equipment so that it can be recycled!

Troubleshooting guide

Type of fault	Cause	Remedy
SIGMA is not supplying water to the appliance(s)	a) Rainwater storage tank is empty, isolating valve to mains water pipe is closed The dry run protection function of Zeta 02 is active b) The pump is sucking in air through the suction line c) Automatic switch Zeta 02 is not starting the pump d) The pump is blocked e) The power supply is interrupted	a) Open the isolating valve, bleed the SIGMA unit and the entire rainwater circuit, start the pump by pressing the RESET button on the automatic switch (Zeta 02) b) Check that the suction line and the floating fine suction filter (SAFF) are correctly positioned and leak-tight; correct if necessary; bleed the system c) Press the RESET button! Call customer service d) Call customer service e) Check the electrical connection, contact customer service if necessary
The automatic switch Zeta 02 is switching the pump on and off continuously	a) Leak in the system, valves at appliances are not fully closed b) Automatic switch is soiled internally/ is defective	a) Check the valves at appliances and the rainwater supply circuit for leaks b) Call customer service **Frequent switching of the pump causes pump damage – disconnect SIGMA from the power supply**
Pump is running continuously	a) Water loss of more than 0.7 l/min from the system b) Electronic circuitry (PCB) of the Zeta 02 is defective / Zeta 02 switch is defective	a) Check the valves at appliances and the rainwater supply circuit for leaks b) Replace the PCB or the Zeta 02 switch (customer service)
Pump is not producing enough pressure	a) The floating fine suction filter / filter casing of the SAFF is dirty b) The pump is sucking in air through the floating fine suction filter (SAFF) c) The pump is defective	a) Clean the floating fine suction filter (SAFF) with a water jet or a fine brush b) Check the position of the floating fine suction filter in the storage tank and correct if necessary c) Call customer service
The residual current device has tripped	a) Water or moisture on electrical components b) SA 06 is not operating c) The pump or pump cable is defective d) The float switch or float switch cable is defective	a) Check the electric cable at the Zeta 02, the cable between the pump and the Zeta 02 and the cable with plug to the float switch, call customer service if necessary b) Check the power supply and, if necessary, the PCB / Zeta 02, customer service! c) Call customer service d) Call customer service
Continual top-up with mains water even when the water level in the rainwater storage tank is sufficient	a) Movement of the float switch in the storage tank is hindered, i.e. it cannot float b) The solenoid valve at the mains water outlet is not closing	a) Inspect the float switch, remove the blockage (customer service) b) Perform a function test on the solenoid valve, replace if necessary, call customer service
Switchover from rainwater operation to mains water operation is not working and the automatic switch is indicating a fault	a) The float valve in the mains water top-up tank is blocked or is not opening b) The float switch in the storage tank is blocked c) The float switch is not transmitting any signals to the solenoid valve	a) Perform a function test on the float valve, clean it if necessary, call customer service b) Perform a function test on the float switch (customer service) c) Check the float switch, replace if necessary (customer service)
Mains water is continuously running out through the emergency overflow of the mains top-up tank (audible!)	The float valve in the mains top-up tank is not closing	Check the valve; call customer service
Inadequate top-up with mains water, the dry run protection function is active	The float valve for mains water top-up is blocked or the dirt filter at the valve inlet is clogged	Clean the float valve or the dirt filter, replace if necessary, customer service
The pressure gauge (pressure indicator) is showing a raised pressure	An external heat source (e.g. radiator) is causing a pressure rise in the SIGMA rainwater supply circuit	a) Remove the heat source (if possible) b) Contact customer service of your installation company (it might be necessary to install a pressure relief valve)
SIGMA units with level indicator: The indicated fill level does not match the actual fill level in the storage tank *See also section headed „SIGMA with level indicator“*	a) Basic setting error b) Measuring lead is defective / not leak-tight c) Level indicator is defective	a) Refer to operating instructions under heading „SIGMA with level indicator“, „Device setting instructions“ b) Contact customer service of your installation company if necessary c) Contact customer service of your installation company

TW = Trinkwasser

Technical data

	SIGMA 3	SIGMA 4
Power consumption Motor power P1 (W) Solenoid valve (W) Standby consumption	 600 8 < 0,2 W	 800 8 < 0,2 W
Mains connection 1-phase AC	230 V, 50 Hz	230 V, 50 Hz
Rated current (A)	2,7	3,5
Degree of protection Aspri suction pump ZETA 02 Solenoid valve Float switch	 IP 55 IP 44 IP 65 IP 68	 IP 55 IP 44 IP 65 IP 68
SIGMA water connections: Inlet connection from rainwater storage tank Mains water connection Outlet connection to appliances (OT=outside thread, IT= inside thread)	 1“ AG ¾“ AG 1“ AG	 1“ AG ¾“ AG 1“ AG
Sound pressure level dB (A) in decibels in rainwater operation mains water operation	 45 63	 47 63
Delivery head H_{max} (m) Flow rate Q_{max} (l/min)	33 65	44 65
Operating data Max. operating temperature (°C) Max. water temperature (°C) Max. startup frequency per hour Pumped fluids	 40 35 20 0.28 mm / 0.44 mm finely filtered rainwater, mains water (clear water containing no aggressive or abrasive substances)	 40 35 20 0.28 mm / 0.44 mm finely filtered rainwater, mains water (clear water containing no aggressive or abrasive substances)
Max. operating pressure (bar)	10	10
Electric connecting cables Float switch ZETA 02 (SIGMA mains cable)	 15 m, bare cable end (3 x 1 mm²) 1.4 m, with plug (3 x 1 mm²)	 15 m, bare cable end (3 x 1 mm²) 1.4 m, with plug (3 x 1 mm²)

Materials

Suction pump of SIGMA 3 and 4 systems
- Suction and discharge casings made of dezincification resistant brass or alternatively from cataphoretic coated cast iron
- Pump casing and impellers made of stainless steel AISI 304
- Shaft made of stainless steel AISI 420
- Carbon / ceramic mechanical seal
- Diaphragms made of glass-fibre reinforced Noryl®
- Motor enclosure made of light metal L-2521

Automatic switch
- Polyamide, polypropylene (casing)

Mains water top-up tank
- Polystyrene (tank)
- Float valve made of KTW-approved plastic

Screw connections, pump connections
- Brass, stainless steel

Connecting hoses
- Natural rubber with stainless steel braiding

SIGMA rainwater unit casing
- Stainless steel (base frame)
- Polystyrene (cover)

Float switch
- Polypropylene (casing)
- Polyamide, PG 11 (cap nut)
- Neoprene cable

Declaration of Conformity

We hereby declare that the machinery specified below conforms to all requirements of the EU Machinery Regulation (EU) 2023/1230.

Product name

Multimat rainwater units, type 205, type 407
Optima 4, Optima 5, Optima Plus rainwater units
Maxima rainwater units, type 205, type 407
Sigma 3, Sigma 4 rainwater units
Break tank Sigura 9 and Sigura 350

Applicable EU Directives

EU Machinery Regulation (EU) 2023/1230

Electromagnetic Compatibility Directive 2014/30/EU.

Angewandte harmonisierte Normen

EN ISO 13849-1:2008 Safety of machinery –Safety-related parts of control systems - Part 1: General principles for design (ISO 13849-1:2006)

EN 809:1998+A1:2009 Pumps and pump units for liquids. Common safety requirements.

EN ISO 12100:2010 Safety of machinery: General principles for design – Risk assessment and risk reduction (ISO 12100:2010)

EN 60204-1:2006 Safety of machinery – Electrical equipment of machines – Part 1: General requirements

EN 60529 (VDE 0470-1) Degrees of protection provided by enclosures

Other applied national standards and specifications

DIN 1989 Rainwater harvesting systems, Parts 1+4
DIN EN 1717 and DIN 1988-100 Protection against pollution of potable water installations

Manufacturer

WISY AG
Oberdorfstraße 26
D-63699 Kefenrod

Authorised person with responsibility for technical documentation

WISY AG
Oberdorfstraße 26
D-63699 Kefenrod

Kefenrod, July 2026

Paul Ahlers
CEO
der WISY AG

Jan Maurer
WISY AG

made in Germany

WISY
Rainwater Harvesting

AHA1150 E V03 08.10.2026 / Technical changes reserved

WRAS APPROVED PRODUCT

This certifies that

RAINHARVESTING SYSTEMS LTD

has had the undermentioned product examined, tested and found, when correctly installed, to comply with the requirements of the United Kingdom Water Supply (Water Fittings) Regulations and Scottish Water Byelaws.

RZ1003 SIGMA, RZ1013 SIGMA, RZ1004 SIGMA & RZ1014 SIGMA RAINWATER HARVESTING KITS

The certificate by itself is not evidence of a valid WRAS Approval. Confirmation of the current status of an approval must be obtained from the WRAS Directory (www.wras.co.uk/directory)

The product so mentioned will be valid until the end of:

January 2021

1601040

Certificate No.

Secretary

Chairman, Product Assessment Group

BELGAQUA

Fédération belge du Secteur de l'Eau asbl
Belgische Federatie voor de Watersector vzw
Boulevard Général Wahis / Generaal Wahislaan 21 – 1030 Bruxelles/Brussel
tel: + 32 (0)2/706 40 90 -
TVA/BTW : BE 407.781.169
email:info@ belgaqua.be – www.belgaqua.be

CERTIFICAAT
CERTIFICAT

N°/Nr Belg 16/094/8b

CONFORM BEVEILIGDE TOESTELLEN
CONFORME BEVEILIGINGEN

APPAREILS CONFORMEMENT PROTEGES -
PROTECTIONS CONFORMES

Soort Apparaat/Genre d'appareil :

BIJVULSYSTEMEN VOOR INSTALLATIES MET WATER VAN VREEMDE HERKOMST
SYSTEME DE REMPLISSAGE POUR INSTALLATION AVEC EAU D'ORIGINE ETRANGERE

Merk/Marque : WISY

Type :
RZ 1003 BE Sigma 3
RZ 1013 BE Sigma 3
RZ 1004 BE Sigma 4
RZ 1014 BE Sigma 4

Opm./Rem. : Drinkwatertechnisch veilig –
Techniquement sûr pour l'eau de distribution

Goedgekeurd op / Approuvé le : 08/02/2016

Vervaldatum certificaat / Expiration du certificat : 08/02/2021

Firma/Firme : WISY AG
Obersdorfstrasse 26
DE – 63699 KEFENROD (DEUTSCHLAND)

De Heer/Monsieur : J. MAURER

Voor de Coördinatiegroep Expertise-Binneninstallaties
Pour le Groupe de Coordination "Expertise-Installations Intérieures"
Rita ROOBROUCK , Control Manager

Guarantee

Period and commencement of the guarantee

This guarantee is valid for a period of 24 months and becomes effective on the date of purchase by the system operator. Replacement of the product under guarantee will not extend the original period of the guarantee.

WISY shall meet its guarantee obligations for the rainwater unit if it can be demonstrated that the following conditions are fulfilled:

Terms and conditions of the guarantee

1. The product has been purchased from a specialist WISY retailer.
2. The product has been commissioned by the WISY customer service or by a specialist company.

Claims can be made under the guarantee only if WISY receives notification in writing of any defect within 14 days of discovery of the defect.

Content and scope of the guarantee

During the guarantee period, WISY shall repair or replace free of charge any defective part. Additional claims for damages shall be excluded to the extent permitted by law.

Limitation of the guarantee

Faults or defects which arise as a result of the following factors are not covered by the guarantee:

- Faulty assembly or installation, e.g. failure to comply with the valid VDE regulations or the operating instructions.
- Failure to provide a floor drain in the utility room/installation area.
- Inappropriate use or exposure to excessive mechanical strain.
- The connection of equipment other than the pump / float switch supplied with the SIGMA system to the socket provided on the SA 06 automatic switch / socket outlet of the float switch.
- External influences, e.g. shipping damage, damage caused by shock impacts, damage caused by exposure to weather, damage caused by soiling, damage caused by other natural phenomena.
- Repairs or modifications undertaken by unauthorized third parties.

WISY AG
Oberdorfstraße 26
D-63699 Kefenrod

Telephone (++49) 60 54 - 91 21-0
Telefax (++49) 60 54 - 91 21-29
E-Mail info@wisy.de
Internet www.wisy.de

Ordering/Billing

Telephone (++49) 60 54 - 91 21-25
Telefax (++49) 60 54 - 91 21-28

Technical Support

Telephone (++49) 60 54 - 91 21-78
(++49) 60 54 - 91 21-77

Device no.

The registered manufacturer device number of your product is as follows:

AHA046-E-V08 14.10.2026 / We reserve the right to make technical changes.