Original

Rainwater unit Maxima

EN

INSTALLATION AND OPERATING INSTRUCTIONS

- Operating instructions for the MAXIMA rainwater unit
- 350 litre buffer tank with submersible pressure pump and electronic control unit in utility room
- Submersible pump with float switch and floating fine suction filter in rainwater storage tank
- Highly reliable rainwater supply over long distances and in systems with large number of extraction points
- Energy-efficient technology

made in Germany

WISY Rainwater Harvesting

MAXIMA rainwater unit

Standard version with 350 litre capacity for indoor and outdoor use of harvested rainwater, suitable for systems with large number of extraction points and in commercial or industrial buildings.

Contents

- Explanation of symbols, general description and applications
- Safety information
- Diagram “Guide to components”
- Description of the control unit
- Delivery, transport, storage and scope of supply
- Accessories
- Description of functions
- Planning examples
- Important information
- Installation requirements
- Installation
- Commissioning
- Maintenance, repairs and environmental guidance
- Technical data
- Troubleshooting guide
- Guarantee conditions
- Company name and address
- Declaration of conformity

Utility room:
Buffer tank or hybrid unit

Failure to heed the information indicated by this symbol could result in serious or fatal injury.

Failure to heed the information indicated by this symbol could result in death by electric shock.

Failure to heed the information indicated by this symbol could result in damage to the equipment, or damage caused by the equipment.

Storage tank equipment:
Submersible pump with float switch and floating fine suction filter

General description and applications

The MAXIMA rainwater unit developed by WISY is a complete system for use in large rainwater harvesting installations and comprises:

- hybrid unit or buffer tank for installation in frost-free, indoor utility rooms. The buffer tank with 350 Liter storage capacity requires a minimum floor area of 1,5 m x 1,5 m and a ceiling height of 2 m.
- the rainwater storage tank equipment, a submersible pump with float switch and floating fine suction filter 1 ¼“, with 20 m electrical connecting cable.

Proper use

MAXIMA is capable of supplying a large number of supply points (e.g. in apartment buildings, or commercial / industrial buildings) with clear, filtered rainwater. The Provedo pump in the rainwater storage tank pumps the rainwater into the indoor buffer tank. The Multigo submersible pressure pump in the buffer tank pumps the water to the appliances; the cut-in pressure of the Multigo (default setting: 1.5 bar) can be adjusted to between 1.5 and 2.8 bar at the ZETA 02/V pump controller.

During periods of dry weather, the buffer tank is topped up on demand with mains water via the open mains water outlet.

When the inlet pipe from the rainwater storage tank is installed along a down gradient to the buffer tank, or if the buffer tank is installed at an elevation lower than the water level in the rainwater storage tank, the non-return valve (Item SV 1501, accessory) is required to prevent the buffer tank from overflowing.

Maxima as a break tank

Without the rainwater storage tank equipment, MAXIMA can function as a break tank, e.g. for irrigation purposes. The mains water is admitted to the buffer tank via the open mains water outlet and the Multigo pumps the water to the extraction points. For this application, the solenoid valve of the open mains water outlet must be connected to the “Outdoor pump” socket (middle shock-proof socket on the control unit).

Improper use

MAXIMA cannot be used to supply appliances which take in water at a rate of less than 1 litre per minute. Extraction points must close completely, the rainwater circuit must be leak-tight. The maximum starting frequency of the Maxima is 20 starts per hour. If the above-mentioned conditions for proper use cannot be reliably fulfilled, a suitable diaphragm expansion vessel must be installed at the discharge end downstream of the ZETA 02/V pump controller.

MAXIMA is not suitable for pumping dirty rainwater or well water (containing dirt or sand particles). Improper usage can result in destruction of the pump.

Safety information

Read the operating instructions carefully before commencing assembly and installation work and store them in a safe place for future reference.

This equipment is not suitable for use/operation by anyone who suffers from any kind of physical, mental or sensory disability unless they are under the supervision of a competent person who is responsible for their safety, or unless they have been instructed by this person in the proper, safe use and operation of the equipment. They must be aware of and understand the potential hazards. Children must not be allowed to operate or play with the equipment or carry out any maintenance work.

The pumps, pump controller, control unit and sensor rod must never be lifted or pulled by the power cable. No one may climb into the rainwater storage tank while the Maxima is connected to the mains supply. The electric plug of the Maxima must be removed from the socket to disconnect the unit from the mains supply before any repair or maintenance work is carried out on the rainwater unit or any maintenance or inspection work is performed inside the rainwater storage tank. Never leave the rainwater storage tank unsupervised when it is open! No one except specially trained personnel is allowed to climb inside the rainwater storage tank. When working inside the tank, personnel must be supervised at all times and must take appropriate safety precautions (e.g. wear a recovery harness).

If the earth-leakage circuit-breaker or fuse trips, the trip cause must be identified and rectified by the manufacturer / by a contractor appointed by the manufacturer.

If the power cable to the Maxima is found to be damaged, it must be replaced by the manufacturer / by a contractor appointed by the manufacturer.

Installation work which involves particular hazards (e.g. risk to mains water supply or the electrical installation) must always be carried out by a properly qualified, approved plumber or electrician who is at least qualified in the following technical areas:

- Selection of appropriate tools and suitable electrical and installation materials
- IP degrees of protection
- Correct methods of installing electrical and other materials
- TN-C system, TN-S system and appropriate additional measures where necessary
- Mains water protection in accordance with DIN EN 1717, DIN 1989

Failure to install the equipment properly can endanger your own life and the lives of people who use the equipment.

The system must be connected to a 230 V, single-phase AC (50 Hz) supply.

The Maxima unit must be operated with clean water (rainwater or mains water) which does not contain aggressive, abrasive or solid substances.

Failure to adhere to these instructions and/or unauthorized interference with the rainwater unit shall exempt WISY AG from any liability for any personal injuries, property damage and/or damage to individual components of the MAXIMA system.

Guide to components

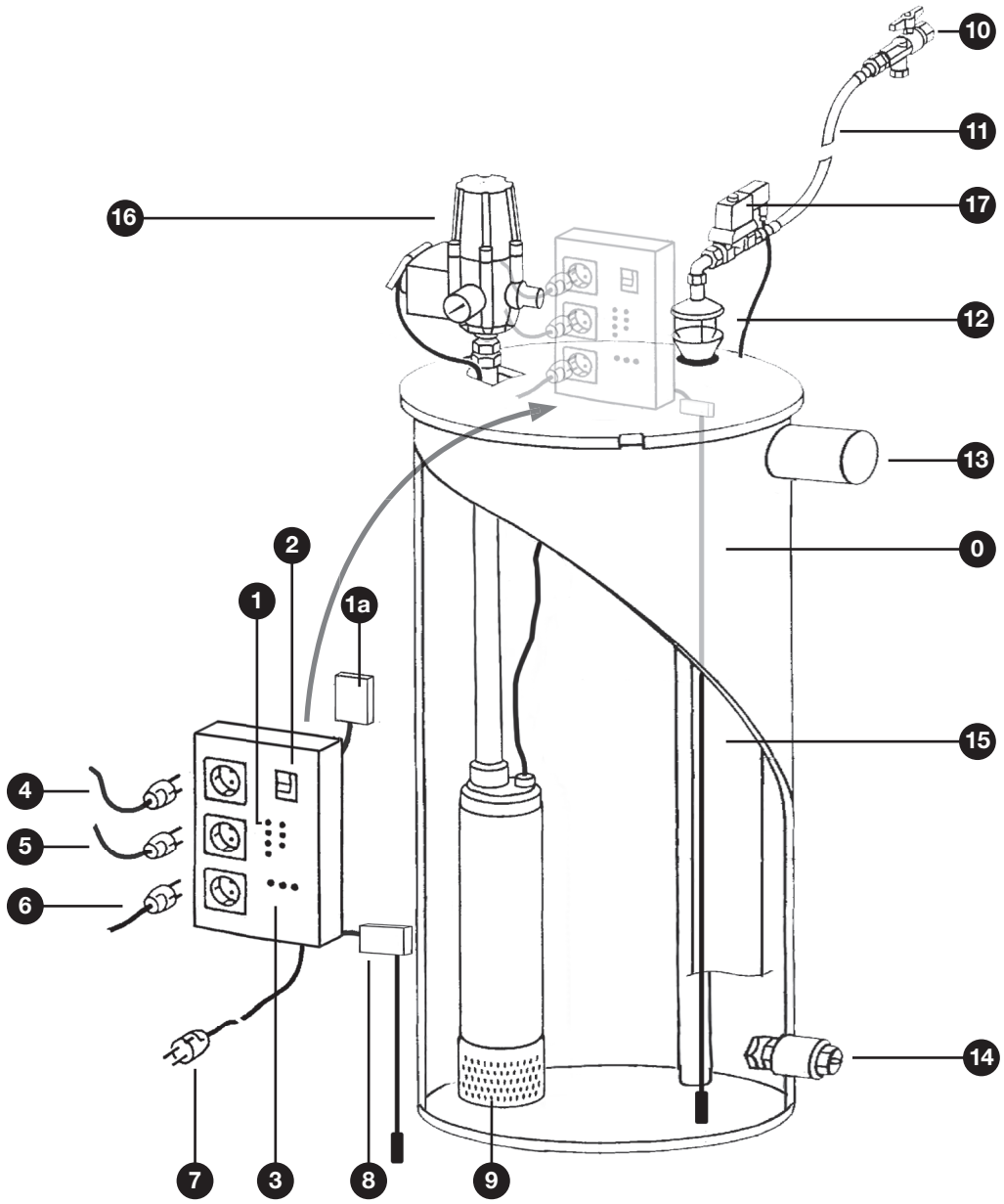

0 **MAXIMA TANK 350 LITRES**
1 Control unit (see also detailed description in these instructions)
1a optional equipment: Connection to the building management system 12 - 230 Volt
2 Main switch
3 Fuses
4 Pump controller connection to “Indoor pump”
5 “Outdoor pump” connection
6 Mains water top-up connection
7 Mains plug
8 pressure sensor unit
9 Submersible pump
10 Ball valve
11 Mains water top-up
12 Open mains water outlet
13 Emergency overflow
14 Rainwater inlet
15 Overflow device
16 ZETA 02/V pump controller
17 Mains water top-up solenoid valve

Guide to components

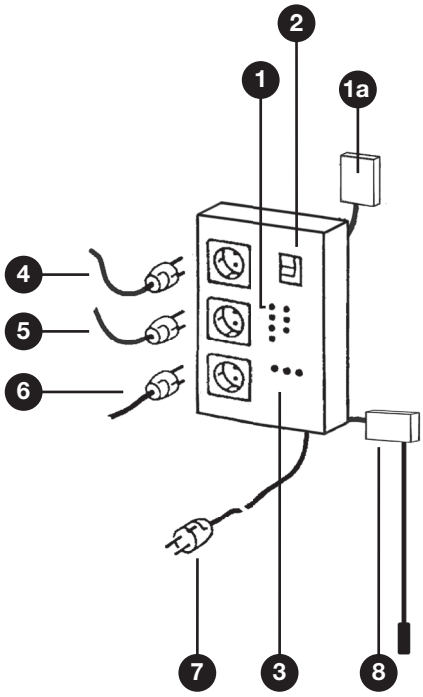

1 Control unit with 4 LEDs (on left) and 3 buttons for activating the relevant function

LED ⚠ Indoor pump - low water buffer tank
LED / button “Outdoor pump”
LED / button “Solenoid valve MW top-up”
LED / button “Fault”

1a optional equipment: Connection to the building management system 12 - 230 Volt

2 Main switch

3 Fuses:
Left: Indoor pump 10 A
Center: Outdoor pump 16 A
Right: Solenoid valve MW top-up 10 A

4 “Indoor pump” socket

5 “Outdoor pump” socket

6 “Solenoid valve mains water top-up” socket

7 Maxima mains plug

8 pressure sensor unit

Operating principle

The pressure sensor measuring unit continuously measures the water level in the intermediate tank. This is compared with predefined values in the control unit. If the water level reaches a corresponding height, the respective system function is activated, start of the cistern pump, mains water top up, or fault signal is triggered.

“Overflow” fault

!

If the pressure sensor measuring unit is not connected to the control unit a fault message is triggered (buzzer). If there is a lack of water in the intermediate tank, a fault message (buzzer) is triggered. The malfunction LED and the low water LED light up. When the water level is sufficient again the fault message is automatically cancelled. If the water level in the intermediate tank is too high, a fault signal (buzzer) is triggered. The malfunction LED lights up. The cause of the fault must be eliminated. The water level must be lowered by drawing off water and then acknowledged by pressing the malfunction button. In the case of units with a remote monitoring connection (special equipment), the fault messages are integrated into the building management system.

“Overvoltage” fault

In order to protect the control system electronics, the pumps and the solenoid valve, the sockets are protected by microfuses (10 Ampere slow, 20 x 5 mm). The microfuses can be accessed with a screwdriver on the front panel. When a fuse trips, the cause of the trip must be investigated and rectified by a specialist. Please also pay careful attention to the safety information in these instructions.

Delivery, transport, storage and scope of supply

MAXIMA is delivered on a disposable pallet. All parts delivered must be inspected for damage and checked for any missing components as soon as they are received. The pallet, or the equipment unpacked from the pallet, must be stored in a safe, dry and frost-free area and protected against the ingress of dirt or contaminants.

Scope of supply and design

The **Maxima 205 / 407** comprises the following components:

Indoor buffer tank

Indoors:

- Operating instructions, information about rainwater storage tank pump, buffer tank pump, Zeta 02/V pump controller and solenoid valve
- Buffer tank for utility room, total height approx. 1540 mm, diameter 770 mm, connection with 1 ¼“ inside thread for pumped rising main from rainwater storage tank, with ½“ drain valve, with emergency overflow DN 100
- Mains water top-up according to DIN 1989, DIN EN 1717 (open outlet) Maxima 205 - ½“ / Maxima 407 - ¾“
- Multigo multi-stage submersible pressure pump (205 / 407) with rubber feet in tank, with energy-efficient ZETA 02/V pump controller (cut-in pressure 1.5 – 2.8 bar)
- Control unit with three shock-proof socket outlets, pressure sensor system
- Labelling set

Rainwater storage tank equipment

Rainwater storage tank:

- Provedo submersible pump, with 20 m electrical connecting cable, with float switch, baseplate, 1 ¼“ suction hose (0.75 m long), floating fine suction filter (1 ¼“) and nozzle (1 ¼“) at discharge end

Description of function

If an extraction point is opened, the system pressure drops. When the cut-in pressure (adjustable between 1.5 and 2.8 bar) at the Zeta pump controller is reached, the Multigo pump in the buffer tank starts. When all valves at the appliances are closed again and there is no measurable water flow, the Zeta pump controller shuts off the Multigo pump when the operating pressure is reached.

Water is always extracted from the rainwater storage tank through the supplied floating suction filter. This floating filter ensures that water is extracted from the cleanest area of the tank rather than from the tank base (sediments) or from the water surface (floating layer). The fine filtering action of the floating filter improves the water quality and protects against pump damage caused by large dirt particles that might be deposited in the tank.

Rainwater operation

Mains water operation

The MAXIMA buffer tank is supplied with rainwater by the submersible pump in the rainwater storage tank. If the rainwater level in the storage tank drops too low, the submersible pump is switched off by the float switch. If the water level in the buffer tank in the utility room continues to fall, the tank is topped up with mains water via the open outlet (implemented according to DIN EN 1717).

Dry run protection

The fully automatic control system of the MAXIMA unit generally ensures that there is sufficient water in the buffer tank. However, if the water drops below a minimum level, the Multigo pump is switched off and not reconnected to the power supply until the tank has been topped up again with sufficient water. If the water in the buffer tank rises above the maximum level, the control system issues an audible overflow alarm. This alarm must be acknowledged with the Fault button. The overflow alarm signal can be optionally connected to an isolated output. In either case, the cause of the fault must be investigated and rectified.

The energy-efficient Zeta 02/V pump controller also provides dry run protection for the Multigo pump.

Manual switchover to mains water operation

The Maxima rainwater unit can be operated in mains water mode while maintenance on the rainwater storage tank is in progress or when an especially high water quality is required. To select mains water mode, the rainwater storage tank pump / loading pump must be disconnected from the power supply (pull the plug out of the „Outdoor pump“ socket on the control unit). Please observe the safety information in these instructions.

Installation requirements

Technical room

the installation room must have a floor drain

A floor drain that is sufficiently dimensioned for the Maxima rainwater unit must be available in the installation room.

Adequate top up with mains water

It must be ensured that the main water pipe connected to the free outlet of the Maxima can feed the volume flow which is required on the consumer side.

To the Maxima 205, consumers with a total requirement of max. 40 l/min can be connected. It must be be ensured that at least 40 l/min mains water can be fed in at the free outlet.

To the Maxima 407, consumers with a total demand of up to 90 l/min can be connected. It must be ensured that at least 90 l/min mains water can be fed in at the free outlet and that the service water network is sufficiently dimensioned for the volume flow.

!

If the above-mentioned mains water quantities cannot be made available to the rainwater unit via the mains water pipe, the number of consumers must be reduced.

Calculation of Pressure losses

Volume flow, pressure

loss and reduction of the volume flow due to pipe length, pipe cross-section, etc. must be taken into account during planning and implementation.

Connection of the emergency Overflow DN 100

The Maxima tank must be installed in a frost-free, cool room. The space requirement is at least 1 m x 1 m, room height 2 m. A 16 A fused socket outlet is required, which must also be fused with a highly sensitive residual current circuit breaker 0.03 A (30 mA). Furthermore, the connections for mains water, cistern water well as a backflow-proof overflow connection in DN 100 must be available. The free mains water outlet and lid of the Maxima tank must be above the maximum water level of the cistern. If you plan to install the intermediate tank below the level of the cistern. (e.g. on slopes), or if the pipe from the cistern has a downward slope to the the intermediate tank, there is a risk that the intermediate tank will overflow. In such a case, further technical precautions must be taken, e.g. by means of an additional shut-off solenoid valve (article SV 1501).

!

Diaphragm Expansion vessel

Since a large number of consumers are usually supplied by the Maxima rainwater system, it is advisable to install an expansion vessel immediately after the Zeta 02/V automatic switch in the pressure line.

As a pressure line from the cistern pump to the Maxima tank we recommend our pressure hose (on request; can be cut to length by the metre) or a PE pipe provided by the customer. PE pipe, cross-section at least 11/4“.

The installation of the pressure hose / PE pipe and pump cable from the cistern into the technical room in the building is carried out in a suitable empty/protective pipe (min. DN 100). Recommendation: straight pipe with a slight slope downward to the cistern.

Adequate outdoor tank pump

If there is a greater distance / height difference between the floor of the cistern and the intermediate tank technical room, it must be checked whether the standard Provedo cistern pump is sufficient or whether a more powerful WISY-Multigo pump is required. If necessary contact our technical advisory service.

Installation

Rainwater storage tank

Installation in rainwater storage tank

Place the tank pump on the base of the rainwater storage tank using the lifting rope and then attach the rope to the supplied stainless steel hook fitted at the top of the storage tank access shaft.

!

Never lift or pull the pump by the power cable.

Position the pump in such a way that the floating suction filter can move freely. Attach a flexible pressure hose (1 ¼“) to the nozzle (1 ¼“) at the pump outlet and secure with a stainless steel hose clamp. The connection in the storage tank must be flexible enough to allow the pump to be removed from the tank by the lifting rope if necessary. The flexible hose can now be connected to the supplied PE adapter (1 ¼“) in the storage tank access shaft.

Important: Flush through pipework

The pressure hose / PE tube and the connecting cable for the submersible pump are routed together with other lines (measuring lead for fill level indicator, etc.) through a 100 mm duct pipe into the utility room.

The tank must contain some water to allow the flushing of the pipework. Water can be added to the tank when the installation work is complete. The pump must be fully submerged.

Utility room / building

Installation in utility room

Fit the non-return valve to the rainwater inlet on the buffer tank. After the pumped rising main from the rainwater tank has been flushed, it can be connected to the non-return valve.

Fit the ZETA 02/V pump controller in a flat-sealing connection to the outlet pipe of the Multigo. Plug the electric plug of the Multigo in the buffer tank into the socket of the Zeta O2/V.

The connection between the Zeta 02/V and the rainwater supply circuit must be free of tension, flat-sealing, high pressure resistant and acoustically isolated. To connect the Maxima 205, please use our Item VS 9953, and the corresponding 1“ version (VD 9928 + ZK 0413) for the Maxima 407. These items are designed to ensure that no noise or pump pressure surges can be transmitted to the piping system.

Important: Flush mains water pipe

The mains water top-up unit is dismantled before the MAXIMA unit is shipped. Insert the tundish into the hole provided (use lubricant).

After the mains water pipe has been flushed, you can connect the open mains water outlet to the mains water pipe.

The overflow connection of the buffer tank must be connected to a 100 mm diameter pipe which must be connected either to a drain or back into the rainwater tank. The pipe must have a minimum diameter of 100 mm over its entire length.

The buffer tank is equipped with an overflow device that prevents sewer odour or gas from entering the tank when it is filled with water.

Remote monitoring connection

connection to the building management system

With this special equipment, fault messages can be integrated into the building management system. The wiring must be done according to the illustration on the left. The faults water shortage in the intermediate tank and too high water level/overflow of the intermediate tank are reported. For information on the malfunctions, cause and remedy, see the table Notes for troubleshooting.

Commissioning

Before commissioning:

Disconnect the cistern inlet pipe at the intermediate tank, flush it with the cistern pump, then reconnect it to the intermediate tank. Flush the line to the solenoid valve of the free outlet. Check all pipe connections for tightness. Check all cables for secure, tension-free installation. During further work in the technical room and during subsequent use, cables and piping must not be damaged. Setting / adjustment work is not required.

Control unit with sockets and main switch:

1. main switch must be in the „off“ position
2. leave the socket for the pump in the house (top socket) free!
3. Plug the cistern pump plug into the middle socket.
4. plug solenoid valve into lower socket for solenoid valve, mains water supply.
5. Plug the mains plug of the control unit into a nearby wall outlet live socket.
6. switch on the control unit at the main switch. The intermediate tank fills up with water from the rainwater storage tank and with mains water via the free mains water outlet.
7. Vent the pump in the intermediate tank by loosening the screw connection at the bottom of the Zeta 02/V automatic control unit. When no more air escapes, close the screw connection again.
8. switch off the control unit (main switch).
9. Insert the plug of the pump in the intermediate tank into the socket of the Zeta automatic switch.
10. Then insert the plug of the Zeta automatic switch into the top socket of the control unit.
11. Switch on the control unit at the main switch.

As soon as the air has escaped from the system, close the consumer valves. After reaching the max. operating pressure (approx. 4.8 bar) the Maxima switches to standby mode and is ready for operation.

Before carrying out maintenance work with open rainwater storage tank, disconnect the pump in the rainwater storage tank from the control unit by pulling out the plug!

Please read and follow the safety instructions (see section headed “Safety information” in these instructions)!

Maintenance and servicing

Inspections/tests at 6-month intervals:

- Check the entire system including the water pipe connections for leaks
- Check the system pressure indication
- Test the pump cut-in and cut-out points set on the pump controller
- Check mains water operation, by pulling out the plug for the rainwater storage tank pump

Inspections/tests at 12-month intervals:

- Inspect the dirt trap at the isolating valve of the mains water connection, clean if required (contact specialist installation company for assistance if necessary)
- Inspect the floating suction filter in the rainwater storage tank; if necessary, clean with water jet or using a brush with extended handle from ground level (contact specialist installation company for assistance if necessary). Disconnect the storage tank pump from the power supply, i.e. by pulling out the plug, before you carry out this work!

Replacement:

- Ten years after the system has been commissioned, the mains water top-up solenoid valve and the diaphragm of the pump controller must be replaced (by specialist installation company).

Repairs

All repair work must be carried out by the manufacturer or by contractors who have been explicitly approved by the manufacturer. Repairs, modifications to components or modifications to factory-assembled MAXIMA components carried out by unauthorized persons shall invalidate the guarantee.

Environmental guidance

Disposal / recycling of packaging

The rainwater unit is shipped in recyclable packaging. Please recycle it! Please also recycle plastic materials, polymer films, etc.

Recycling of old units

Waste electrical and electronic equipment often contains valuable materials which can be reused / recycled. However, they also contain harmful substances which are essential to the proper, safe operation of the equipment. These substances pose a risk to human health and to the environment if the products are disposed of as general (non-recyclable) household waste or are incorrectly handled. For this reason, you must never dispose of old units / components as general (non-recyclable) household waste.

Use the recycling centres / facilities provided in your area to return defective electrical or electronic equipment so that it can be recycled!

Guarantee

Period and commencement of the guarantee

This guarantee is valid for a period of 24 months and becomes effective on the date of purchase by the customer. Replacement of the product under guarantee will not extend the term of the original guarantee.

WISY shall meet its guarantee obligations for the MAXIMA rainwater unit if it can be demonstrated that the following conditions are fulfilled:

Terms and conditions of the guarantee

1. The product has been purchased from a specialist WISY retailer in the Federal Republic of Germany.
2. The product has been commissioned by the WISY customer service or by a specialist company.

Claims can be made under the guarantee only if WISY receives notification in writing of any defect within 14 days of discovery of the defect.

Content and scope of the guarantee

WISY shall rectify any functional defects during the guarantee period by repairing or replacing defective components free of charge. Additional claims for damages shall be excluded to the extent permitted by law.

Limitation of the guarantee

Faults or defects which arise as a result of the following factors are not covered by the guarantee:

- Faulty assembly or installation, e.g. failure to comply with the valid VDE regulations or the installation instructions.
- Failure to connect the emergency overflow of the buffer/hybrid tank to a drain or failure to provide a floor drain.
- Inappropriate use or exposure to excessive mechanical strain
- The connection of equipment other than the submersible pressure pump, feed pump and solenoid valve supplied with the system to the sockets provided for these components.
- External influences, e.g. shipping damage, damage caused by shock impacts, damage caused by exposure to weather or by other natural phenomena.
- Repairs or modifications undertaken by unauthorized third parties.

Technical data

	MAXIMA 205	MAXIMA 407
Height of unit Installation space required	1540 mm Floor area 1 x 1 m	1540 mm Floor area 1 x 1 m
Hybrid / buffer tank	Tank with cover made of black polyethylene, 700 mm diameter, 350 l storage capacity, height 1225 mm	Tank with cover made of black polyethylene, 700 mm diameter, 350 l storage capacity, height 1225 mm
Multigo in buffer tank	Submersible pressure pump Multigo 205 in stainless-steel casing, 4-stage, power consumption P1 max. 1 kW, delivery rate max. 80 l/min., delivery head max. 48 m, medium: clear, filtered rainwater (max. 35°C), degree of protection IP 68	Submersible pressure pump Multigo 407 in stainless-steel casing, 4-stage, power consumption P1 max. 1.3 kW, delivery rate max. 120 l/min., delivery head max. 49 m, medium: clear, filtered rainwater (max. 35°C), degree of protection IP 68
Pump controller Standby (W)	ZETA 02/V cut-in pressure adjustable between 1.5 - 2.8 bar, with pressure gauge < 0.2	ZETA 02/V cut-in pressure adjustable between 1.5 - 2.8 bar, with pressure gauge < 0.2
Control unit	Sensor control with switching function for rain- and mains water top up, Dry run protection of the pumps and overflow alarm	Sensor control with switching function for rain- and mains water top up, Dry run protection of the pumps and overflow alarm
Open mains water outlet	Electrically controlled mains water top-up with open outlet according to DIN EN 1717, comprising ½“ brass ball valve, stainless-steel dirt trap (mesh width 0.65 mm), 0.5 m connecting hose, ½“ solenoid valve with connecting cable and shock-proof plug, stainless-steel tundish DN 50 with defined air gap and laminar flow device for splash-free flow of mains water.	Electrically controlled mains water top-up with open outlet according to DIN EN 1717, comprising ¾“ brass ball valve, stainless-steel dirt trap (mesh width 0.65 mm), 0.5 m connecting hose, ¾“ solenoid valve with connecting cable and shock-proof plug, stainless-steel tundish DN 50 with defined air gap and laminar flow device for splash-free flow of mains water.
Rainwater storage tank pump	Submersible feed pump with stainless-steel casing, baseplate, fixed vertical float switch, with floating fine suction filter 1 ¼“, nozzle 1 ¼“ at discharge end; 20 m connecting cable, power consumption 0.5 kW, delivery rate 40 l/ min at 7.5 m delivery head, max. immersion depth 5 m, medium: clear, filtered rainwater (max. 35°C), degree of protection IP 68	Submersible feed pump with stainless-steel casing, baseplate, fixed vertical float switch, with floating fine suction filter 1 ¼“, nozzle 1 ¼“ at discharge end; 20 m connecting cable, power consumption 0.5 kW, delivery rate 80 l/ min at 6 m delivery head, max. immersion depth 5 m, medium: clear, filtered rainwater (max. 35°C), degree of protection IP 68
Connections: - Overflow - Tank drain - Rainwater supply circuit - Rainwater in storage tank - Open mains water outlet	 DN 100 ½“ tap 1“ outside thread 1 ¼“ inside thread ½“ brass ball valve (inside thread)	 DN 100 ½“ tap 1“ outside thread 1 ¼“ inside thread ¾“ brass ball valve (inside thread)
Power supply	230 V, 50 Hz, max. 16 A, 1-phase alternating current	230 V, 50 Hz, max. 16 A, 1-phase alternating current
Control unit fuse protection	Microfuses, slow-blow - Indoor pump 10 A - Outdoor pump 10 A - Solenoid valve 10 A	Microfuses, slow-blow - Indoor pump 10 A - Outdoor pump 10 A - Solenoid valve 10 A
Weight	47 kg	49 kg
Top-up flow rate (3 bar system pressure)	½“ mains water outlet Approx. 40 l/min	¾“ mains water outlet Approx. 90 l/min
Electr. connecting cable control unit Electr. cable for submersible feed pump (standard version)	1.5 m (3x 1.5 mm²) 20 m (3x 1.00 mm²)	1.5 m (3x 1.5 mm²) 20 m (3x 1.00 mm²)

The MAXIMA complies with the following technical standards: DIN EN 1717 (formerly DIN 1988/4 Mains water top-up via an "open outlet"), DIN 1989, Part 1, for rainwater harvesting systems, and further technical standards and regulations (including separation of mains water and rainwater circuits).

Materials

Submersible pump (rainwater storage tank)

- Stainless steel AISI 304 (pump casing, casing cover, impeller)
- Stainless steel AISI 303 (shaft)
- Ceramic, carbon, NBR (shaft seal)
- Mineral oil (lubricant)

Submersible pressure pump (buffer tank)

- Stainless steel AISI 304 (casing, motor casing)
- Stainless steel AISI 431 (pump shaft)
- PPE + PS (diffuser and impeller)
- Ceramic, carbon, NBR (shaft seal at motor end); SiC, carbon, NBR (pump end)

Open mains water outlet

- Stainless-steel (tundish with nozzle)
- Brass (solenoid valve)

Floating fine suction filter

- Stainless steel 1.4301 (suction strainer)
- PVC compound (suction hose)
- Polyethylene (float)

Pump controller

- Polyamide, polypropylene (casing)

Screw connections, pump connections, ball valve

- Brass, stainless steel

Connecting hoses

- Natural rubber with stainless steel braiding

Buffer / hybrid tank casing

- PE

Control unit

- Polyester (casing)

Troubleshooting guide

Type of fault	Cause	Remedy
MAXIMA is not supplying water to appliances	a) Rainwater storage tank is empty and isolating valve at mains water connection is closed (dry run protection is active; the LED “Indoor pump, low water buffer tank” is illuminated). b) Pump controller does not start pump in MAXIMA tank. c) Pump is blocked. d) Power supply is interrupted.	a) Open the isolating valve at the mains water top-up connection. The tank is topped up with mains water until switching point “DRP off“ is reached. The LED goes out and MAXIMA is operational again. b) Check the pump controller, replace if necessary. c) Contact customer service. d) Check the power connection.
The pump controller is switching the tank pump on and off continuously (rapid on/off cycling).	Leak in the piping system of the house, or drippinng faucet system.	Switch MAXIMA off at the main switch! Inspect the rainwater supply circuit for minor leaks (e.g. dripping taps or valve that is not completely closed in toilet cistern) and repair.
Buffer tank pump is running continuously	Water loss of more than 1 l/min from the water circuit	Close isolating valve between pump controller and appliances! If the pump continues to run, the pump controller needs to be replaced or repaired (customer service!). If the pump stops, the entire installation, water taps, toilet cistern valves and other appliance valves must be checked and sealed or replaced!
MAXIMA is not producing enough pressure	Pump in buffer tank is defective.	Contact customer service of your installation company!
Continuous top-up with mains water even though rainwater storage tank contains enough water	a) Float switch at rainwater storage tank pump is blocked, or rainwater storage tank pump is defective b) Floating suction filter of loading pump is dirty c) Pumped rising main between loading pump and buffer tank is damaged d) Power cable between loading pump and control system is damaged	a) Check the rainwater storage tank pump, contact customer service if necessary! b) Clean exterior surface of filter body with a brush! c) Check the pumped rising main and replace if necessary (contact specialist installation company)! d) Check the power cable and replace if necessary (contact specialist installation company)!
Buzzer is on, Alarm light is on a) alarm water shortage b)-d) overflow of the intermediate tank	a) Water shortage - excess water withdrawal b) Water level cistern higher than max. water level Intermediate tank c) Supply line from cistern is installed with a slope towards the intermediate tank d) Unit control defective	a) Take care of sufficient water top up, see if fault disappears with sufficient water level b) Insert a shut-off valve (WISY article SV 1501) in the supply line from the cistern. c) Insert the shut off valve (WISY article SV 1501) in the supply line from the cistern. d) Check control, call customer service
Control unit has failed	One or several microfuses provided to protect the connected pumps and the solenoid valve have blown as a result of overcurrent	Switch the toggle switch on the control unit to “Off”! The microfuses are easy to access with a screwdriver on the front panel of the control unit. Replace the fuses and switch on the control unit again! If the control unit still fails to operate, contact customer service.

Declaration of Conformity

We hereby declare that the machinery specified below conforms to all requirements of the EU Machinery Regulation (EU) 2023/1230.

Product name

Multimat rainwater units, type 205, type 407
Optima 4, Optima 5, Optima Plus rainwater units
Maxima rainwater units, type 205, type 407
Sigma 3, Sigma 4 rainwater units
Break tank Sigura 9 and Sigura 350

Applicable EU Directives

EU Machinery Regulation (EU) 2023/1230

Electromagnetic Compatibility Directive 2014/30/EU.

Angewandte harmonisierte Normen

EN ISO 13849-1:2008 Safety of machinery –Safety-related parts of control systems - Part 1: General principles for design (ISO 13849-1:2006)

EN 809:1998+A1:2009 Pumps and pump units for liquids. Common safety requirements.

EN ISO 12100:2010 Safety of machinery: General principles for design – Risk assessment and risk reduction (ISO 12100:2010)

EN 60204-1:2006 Safety of machinery – Electrical equipment of machines – Part 1: General requirements

EN 60529 (VDE 0470-1) Degrees of protection provided by enclosures

Other applied national standards and specifications

DIN 1989 Rainwater harvesting systems, Parts 1+4
DIN EN 1717 and DIN 1988-100 Protection against pollution of potable water installations

Manufacturer

WISY AG
Oberdorfstraße 26
D-63699 Kefenrod

Authorised person with responsibility for technical documentation

WISY AG
Oberdorfstraße 26
D-63699 Kefenrod

Kefenrod, July 2026

Paul Ahlers
CEO
der WISY AG

Jan Maurer
WISY AG

made in Germany

WISY
Rainwater Harvesting

AHA1150 E V03 08.10.2026 / Technical changes reserved

Commissioning record

Commissioned on: _____

Commissioned by (name of company, employee):

_____

All system functions and switching points comply with the specifications in these instructions.

_____

Date: _____

Signature: _____

Service record

Serviced on: _____

Serviced by (name of company, employee):

_____

All inspection and maintenance work has been carried out in accordance with section “Maintenance and servicing” in these instructions.

_____

Date: _____

Signature: _____

OT Hitzkirchen
Oberdorfstraße 26
D-63699 Kefenrod

Telefon 0 60 54 - 91 21-0
Telefax 0 60 54 - 91 21-29
E-Mail info@wisy.de
Internet www.wisy.de

Device no.

The registered manufacturer device number of your product is as follows:

WISY AG
D-63699 Kefenrod, Oberdorfstraße 26
Telefon +49 (0) 60 54-91 21-0

Fax +49 (0) 60 54-91 21-29
Internet: www.wisy.de
E-Mail: info@wisy.de

AHA082-E-V09 19.10.2026 / We reserve the right to make technical changes